ISPL
Intelligent Signal
Processing Lab.

ICPR 2020
25th INTERNATIONAL CONFERENCE ON PATTERN RECOGNITION
Milan, Italy 10 | 15 January 2021

Single Image Super-Resolution with Dynamic Residual Connection

Karam Park, Jae Woong Soh, Nam Ik Cho

Seoul National University

Introduction

Previous Single Image Super-resolution methods:

- Require huge number of parameters.
- Use manually designed structure with fixed residual connection.
- These structures can only use a limited combination of features, following the static residual path.

Our method:

- Lightweight SISR network based on dynamic residual attention.
- Network learns how to design its residual paths during training process.
- The proposed method allows the network to dynamically select residual paths depending on input image, based on the idea of attention mechanism.

Proposed Method

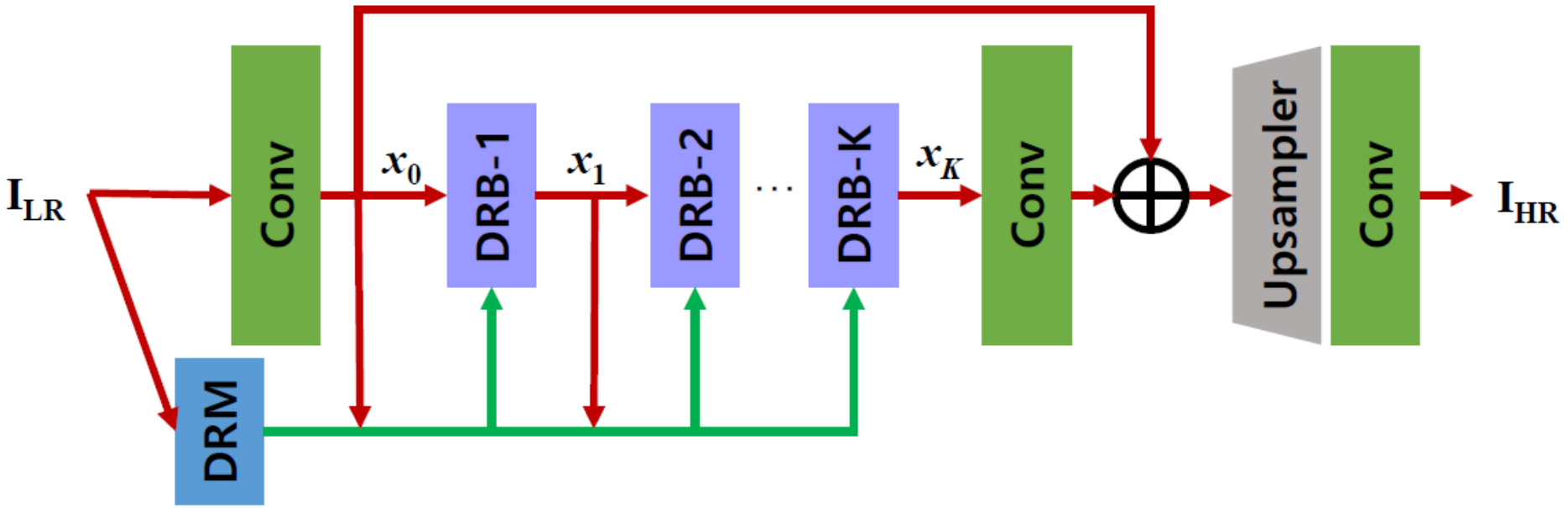

- Proposed Dynamic Residual Attention Network (DRAN) consists of five main parts:
  - Two convolutional layers at the input and output side
  - Dynamic residual module (DRM)
  - Set of dynamic residual blocks (DRBs)
  - Upsampler network

Proposed Method: Dynamic Residual Module

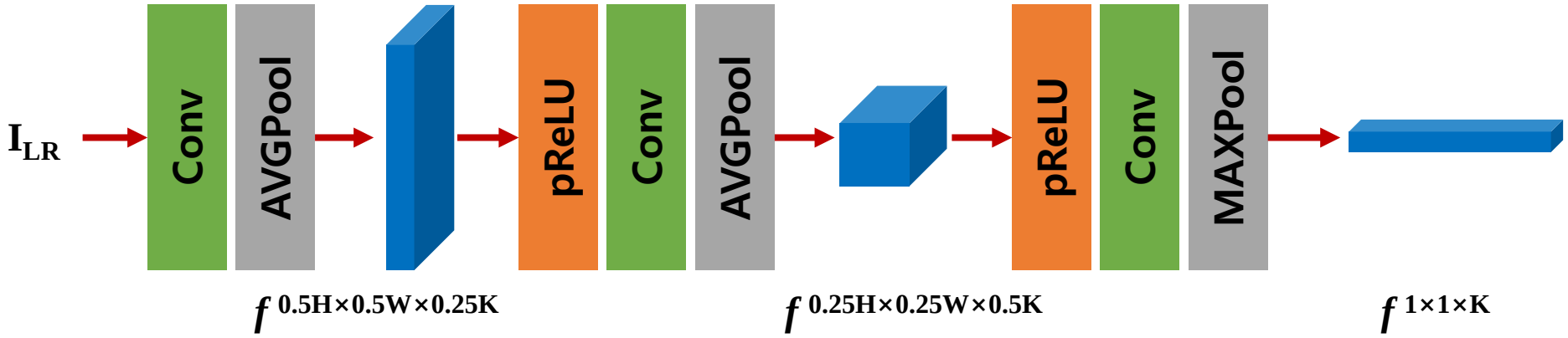

- Dynamic Residual Module (DRM) learns the correlation between an input image and residual path during training process.

- DRM provides the optimal residual path set for the given input image.

Proposed Method: Dynamic Residual Block

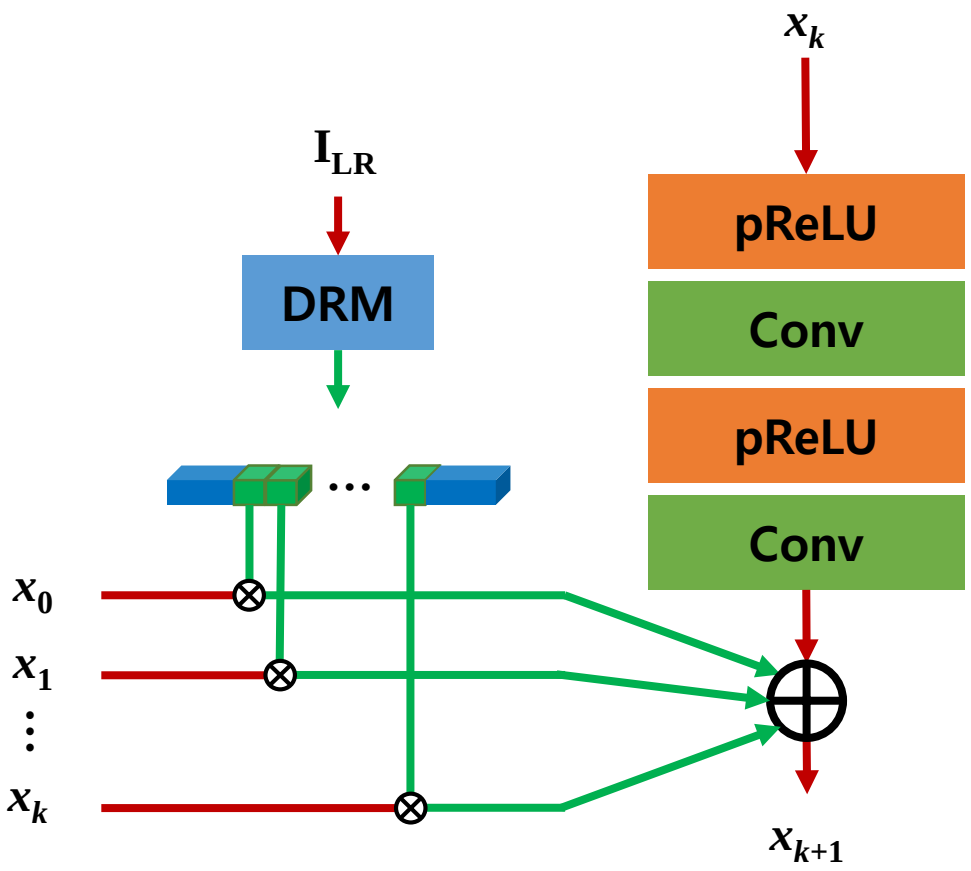

- All features from preceding blocks are potentially connected with residual connection, and their intensity is determined by DRM.

Quantitative and Qualitative Results

Scale	Method	Params	MAC	Set5 PSNR/SSIM	Set14 PSNR/SSIM	B100 PSNR/SSIM	Urban100 PSNR/SSIM
x2	Bicubic	-	-	33.66 / 0.9299	30.24 / 0.8688	29.56 / 0.8431	26.88 / 0.8403
	FSRCNN	0.01M	6.0G	37.00 / 0.9558	32.63 / 0.9088	31.53 / 0.8920	29.88 / 0.9020
	DRCN	1.77M	17974G	37.63 / 0.9588	33.04 / 0.9118	31.85 / 0.8942	30.75 / 0.9133
	DRRN	0.30M	6796.9G	37.74 / 0.9591	33.23 / 0.9136	32.05 / 0.8973	31.23 / 0.9188
	MemNet	0.68M	623.9G	37.78 / 0.9597	33.28 / 0.9143	32.08 / 0.8978	31.31 / 0.9195
	SelNet	0.97M	225.7G	37.89 / 0.9598	33.61 / 0.9160	32.08 / 0.8984	-
	CARN	1.59M	222.8G	37.76 / 0.9590	33.52 / 0.9166	32.09 / 0.8978	31.92 / 0.9256
	FALSR-A	1.02M	234.7G	37.82 / 0.9595	33.55 / 0.9168	32.12 / 0.8987	31.93 / 0.9256
	FALSR-B	0.33M	74.7G	37.61 / 0.9585	33.29 / 0.9143	31.97 / 0.8967	31.28 / 0.9191
	FALSR-C	0.41M	93.7G	37.66 / 0.9586	33.26 / 0.9140	31.96 / 0.8965	31.24 / 0.9187
	OISR-RK2-s	1.37M	316.2G	37.98 / 0.9604	33.58 / 0.9172	32.18 / 0.8996	32.09 / 0.9281
	OISR-LF-s	1.37M	316.2G	38.02 / 0.9605	33.62 / 0.9178	32.20 / 0.9000	32.21 / 0.9290
	DRAN-s	0.79M	180.6G	37.89 / 0.9601	33.49 / 0.9171	32.14 / 0.8999	31.98 / 0.9272
	DRAN	1.48M	318.9G	38.05 / 0.9607	33.65 / 0.9179	32.20 / 0.9002	32.25 / 0.9296
x3	Bicubic	-	-	30.39 / 0.8682	27.55 / 0.7742	27.21 / 0.7385	24.46 / 0.7349
	FSRCNN	0.01M	5.0G	33.16 / 0.9140	29.43 / 0.8242	28.53 / 0.7910	26.43 / 0.8080
	DRCN	1.77M	17974G	33.82 / 0.9226	29.76 / 0.8311	28.80 / 0.7963	27.15 / 0.8276
	DRRN	0.30M	6796.9G	34.03 / 0.9244	29.96 / 0.8349	28.95 / 0.8004	27.53 / 0.8378
	MemNet	0.68M	623.9G	34.09 / 0.9248	30.00 / 0.8385	28.96 / 0.8001	27.56 / 0.8376
	SelNet	1.16M	120.0G	34.27 / 0.9257	30.30 / 0.8399	28.97 / 0.8025	-
	CARN	1.59M	118.8G	34.29 / 0.9255	30.29 / 0.8407	29.06 / 0.8034	28.06 / 0.8493
	OISR-RK2-s	1.55M	160.1G	34.43 / 0.9273	30.33 / 0.8420	29.10 / 0.8053	28.20 / 0.8534
	OISR-LF-s	1.55M	160.1G	34.39 / 0.9272	30.35 / 0.8426	29.11 / 0.8058	28.24 / 0.8544
	DRAN-s	0.97M	100.0G	34.30 / 0.9261	30.27 / 0.8413	29.05 / 0.8049	28.07 / 0.8509
	DRAN	1.66M	161.5G	34.50 / 0.9276	30.40 / 0.8437	29.13 / 0.8068	28.35 / 0.8567
x4	Bicubic	-	-	28.42 / 0.8104	26.00 / 0.7027	25.96 / 0.6675	23.14 / 0.6577
	FSRCNN	0.01M	4.6G	30.48 / 0.8628	27.49 / 0.7503	26.90 / 0.7101	24.52 / 0.7221
	DRCN	1.77M	17974G	31.53 / 0.8854	28.02 / 0.7670	27.23 / 0.7233	25.14 / 0.7510
	DRRN	0.30M	6796.9G	31.68 / 0.8888	28.21 / 0.7720	27.38 / 0.7284	25.44 / 0.7638
	MemNet	0.68M	623.9G	31.74 / 0.8893	28.26 / 0.7723	27.40 / 0.7281	25.50 / 0.7630
	SelNet	1.42M	83.1G	32.00 / 0.8931	28.49 / 0.7783	27.44 / 0.7325	-
	CARN	1.59M	90.9G	32.13 / 0.8937	28.60 / 0.7806	27.58 / 0.7349	26.07 / 0.7837
	OISR-RK2-s	1.52M	114.2G	32.21 / 0.8950	28.63 / 0.7822	27.58 / 0.7364	26.14 / 0.7874
	OISR-LF-s	1.52M	114.2G	32.14 / 0.8947	28.63 / 0.7819	27.60 / 0.7369	26.17 / 0.7888
	DRAN-s	0.94M	80.3G	32.09 / 0.8925	28.54 / 0.7810	27.53 / 0.7356	25.98 / 0.7835
	DRAN	1.62M	114.9G	32.27 / 0.8947	28.63 / 0.7833	27.61 / 0.7380	26.23 / 0.7909