Radar Image Reconstruction from Raw ADC Data using a Parametric Variational Autoencoder with Domain Adaptation

TRACK5 Image and Signal Processing

2629

Michael Stephan[12*], Thomas Stadelmayer[12*], Avik Santra[2], Georg Fischer[1], Robert Weigel[1], Fabian Lurz[1]
[1]Friedrich-Alexander-University Erlangen-Nuremberg, Erlangen, Germany
[2]Infineon Technologies AG, Neubiberg, Germany
*equal contribution

Introduction

Goal:
Localization of human targets in indoor environment using a low-cost radar sensor.

Challenges:
Indoor environment → occlusions, ghost targets, multipath reflections, etc.
Limited training data

Contribution:
Single-frame human position estimation from the raw ADC data with a variational autoencoder and domain adaption to overcome the limited training data

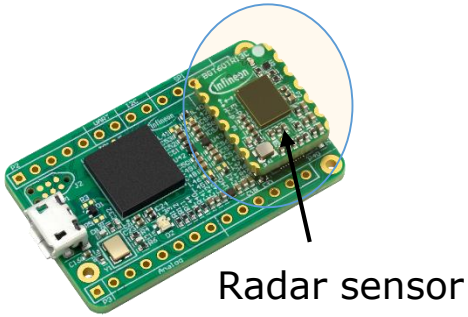

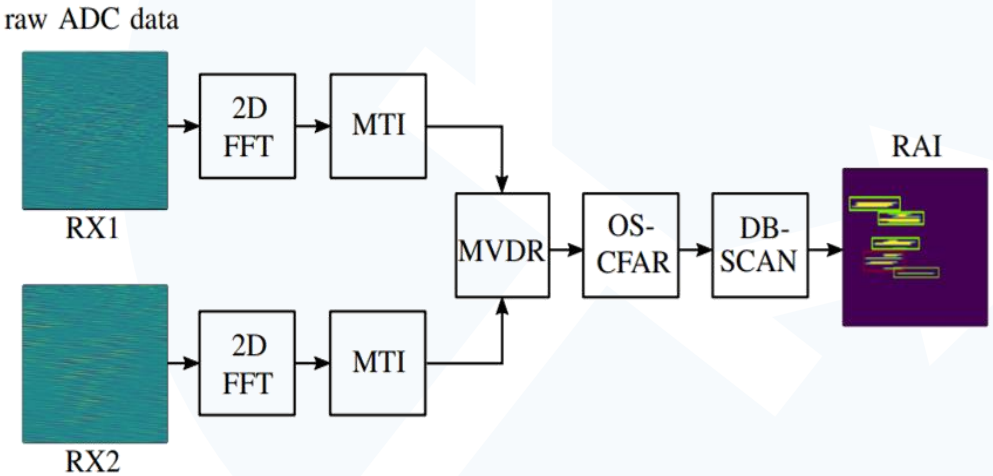

Architecture – Proposed Solution

Proposed Solution:

- Localization via a variational autoencoder
- Parametric layer for FFT sampling learned through proposed CFEL
- Domain adaptation using synthetic data
- Cross-antenna information fusion only after the VAE

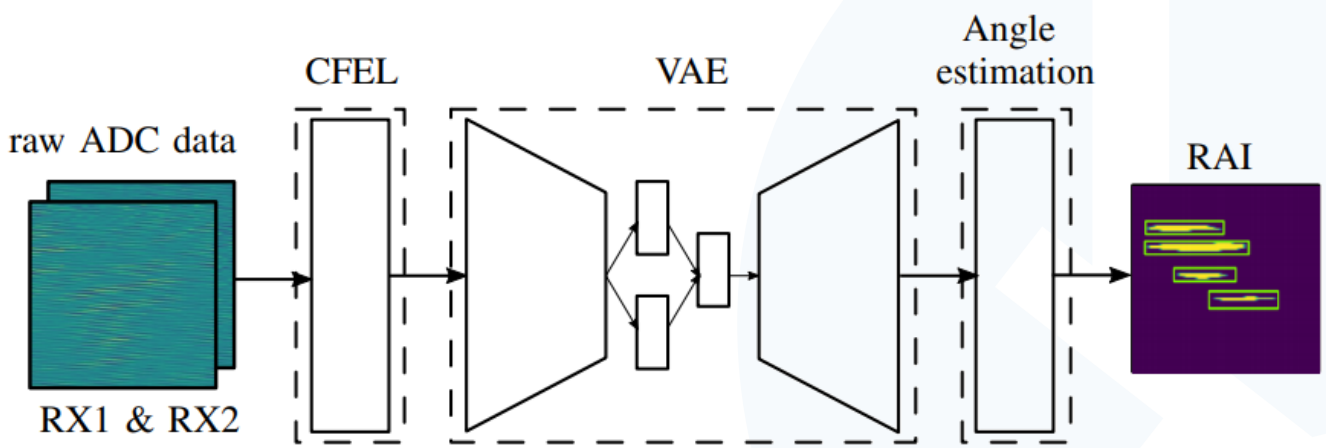

$$loss = L_{FL} + \beta \cdot L_{DA} + \phi \cdot L_{KL}$$

Results

- Clear improvement over traditional 1-frame localization
- Slightly better performance than other autoencoder-based approach in [1], with better performance on general point target angle estimation

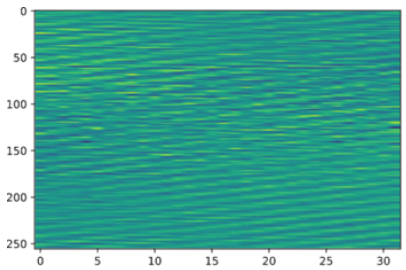

ADC data after MTI

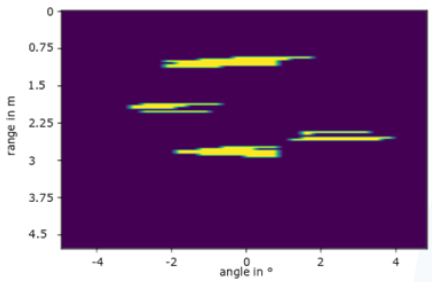

labels

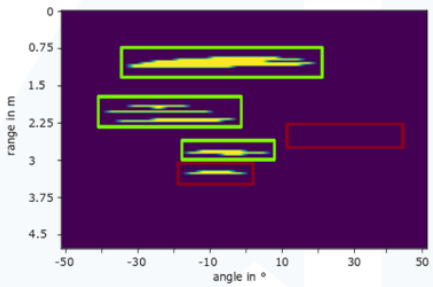

traditional processing chain

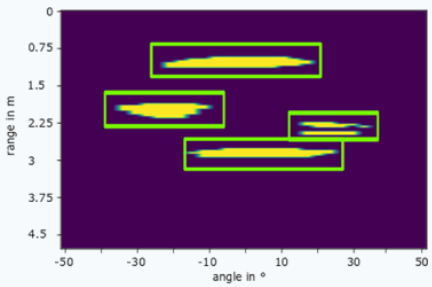

proposed approach

Approach	Description	F1-Score	Model Size
Traditional	OS-CFAR with DBSCAN	0.61	-
AE	AE with complex RDI as input	0.77	1.23 MB
VAE	VAE with CFEL layer and DA	**0.80**	1.71 MB

LTE

Lehrstuhl für Technische Elektronik

Michael.stephan@fau.de
Thomas.Stadelmayer@fau.de
Avik.Santra@Infineon.com