# Deep Real-time Hand Detectoin Using CFPN on Embedded Systems


Pirdiansyah Hendri
Depart. of Com. Scie. Eng.
National Taiwan Ocean University
Keelung, Taiwan, R.O.C.
hendriplg@gmail.com

Jun-Wei Hsieh
College of AI.
National Chiao Tung University
Hsin Chu, Taiwan, R.O.C.
jwhsieh@nctu.edu.tw

Ping-Yang Chen
Dep. of C. S.
National Chiao Tung University
Hsin Chu, Taiwan, R.O.C.
pingyang.cs08g@nctu.edu.tw

M. Gochoo
College of I. T.
United Arab Emirates University
United Arab Emirates
mgochoo@uaeu.ac.ae

Yong-Sheng Chen
Dep. of C. S.
National Chiao Tung University
Hsin Chu, Taiwan, R.O.C.
yschen@cs.nctu.edu.tw

One
- Introduction

Two
- Related Works

Three
- Proposed Method

Four
- Experimental Result

Five
- Discussions & Conclussions

# Introduction (1/2)

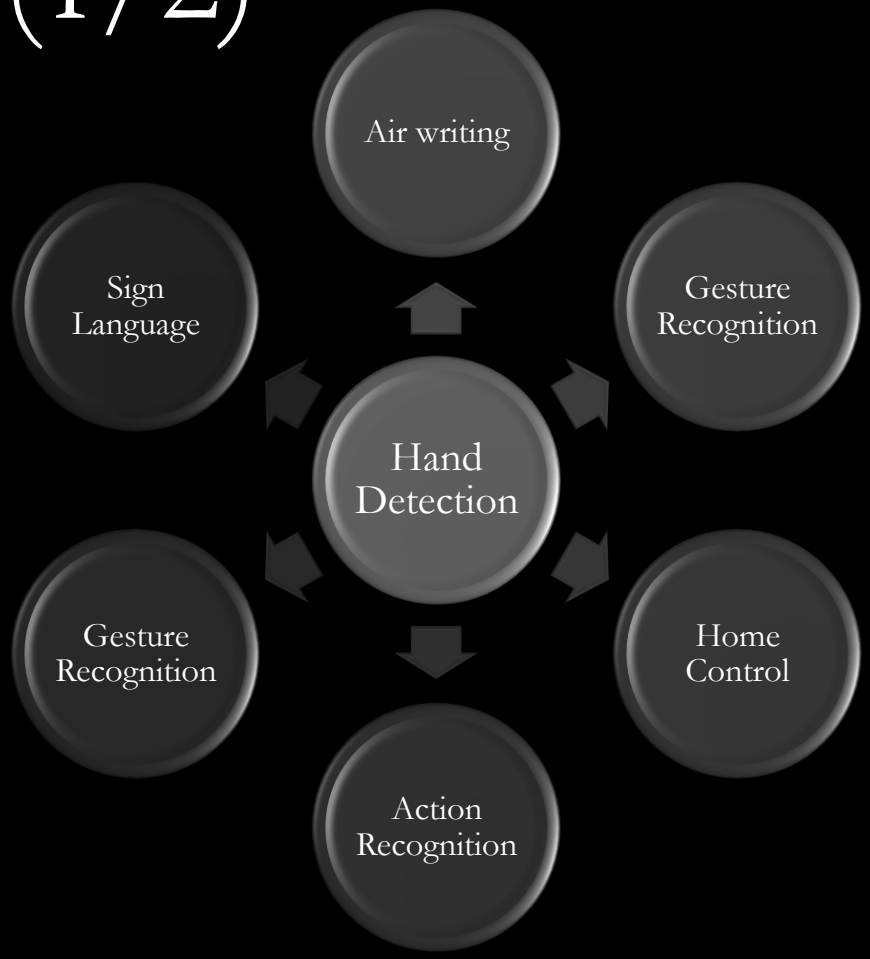

# Introduction (2/2)

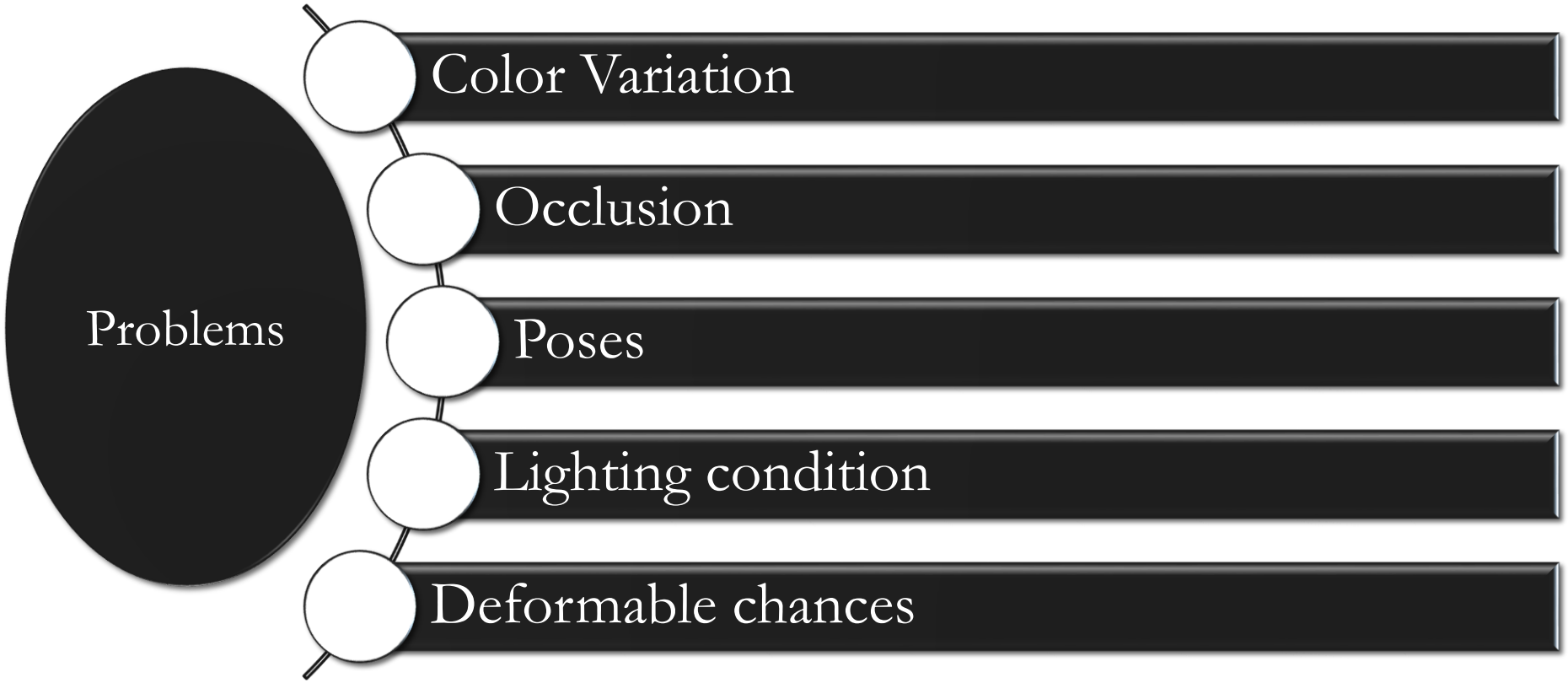

# Related works

Object Detection

Hand Detection

# Related works

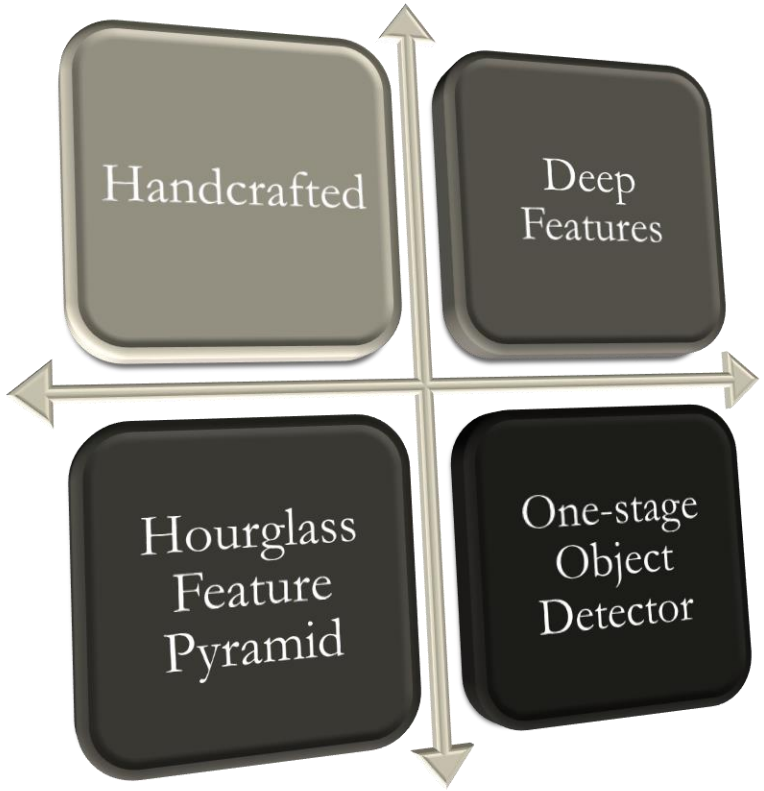

# Proposal Method

**Concatenated Feature Pyramid Network**

**Backbone**

# Proposal Method (1/6)

## Feature Pyramid Network

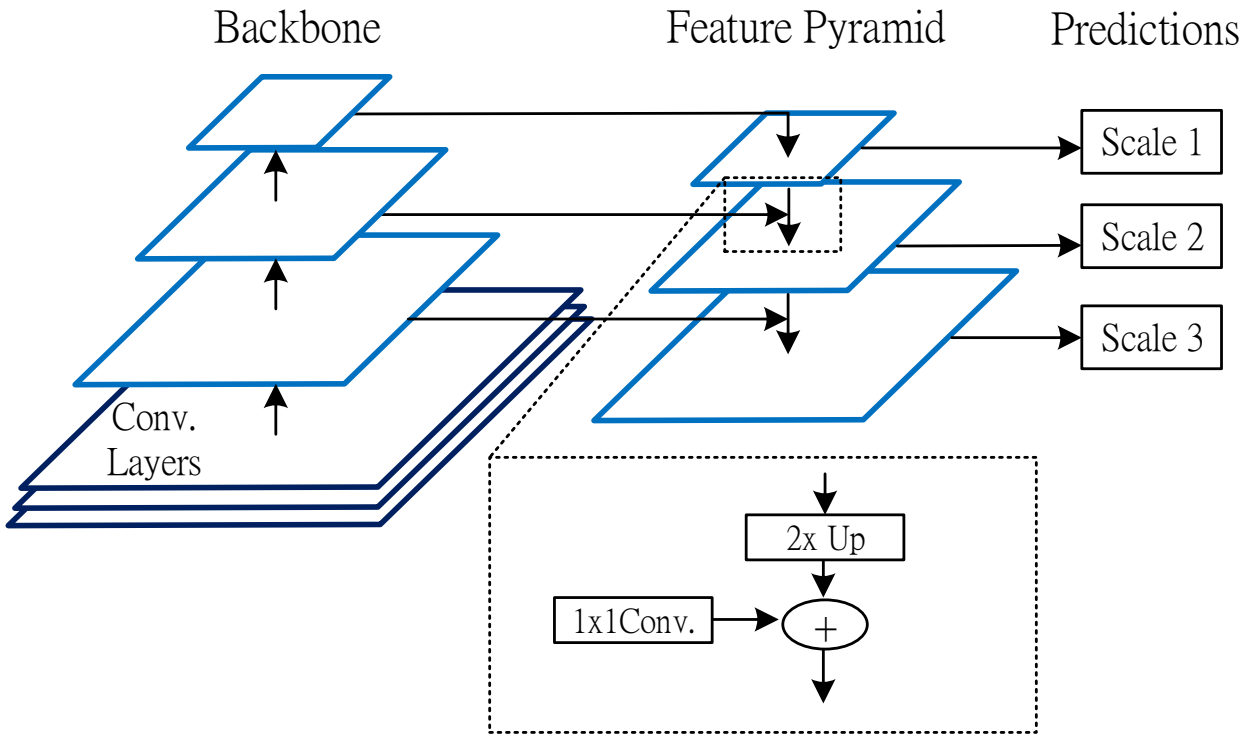

# Proposal Method (2/6)

## Yolo Architecture

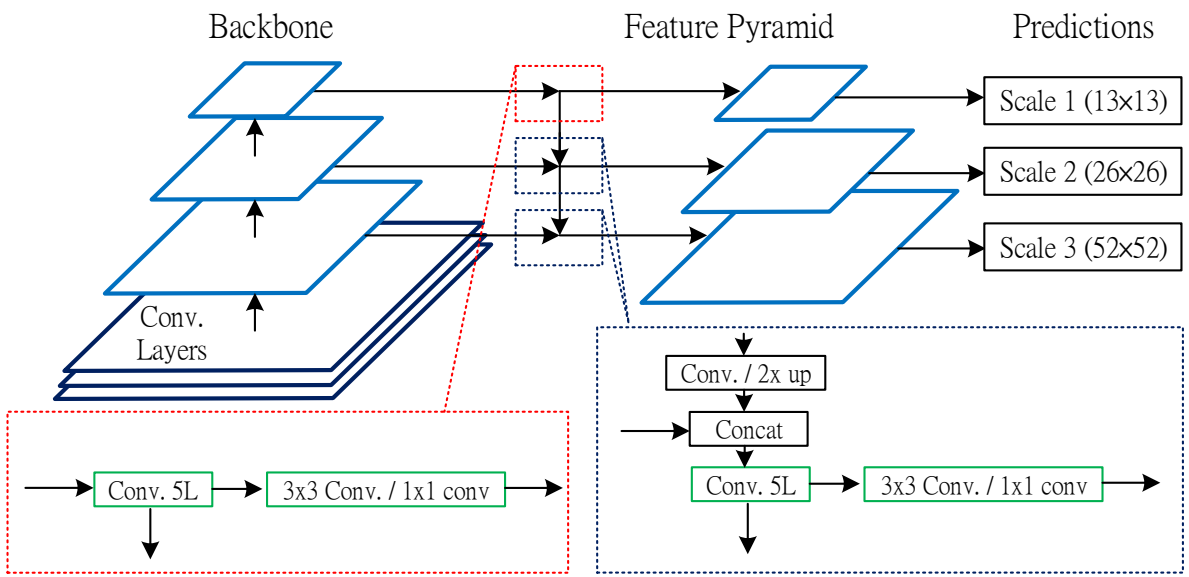

# Proposal Method (3/6)

## Concatenated Feature Pyramid Network

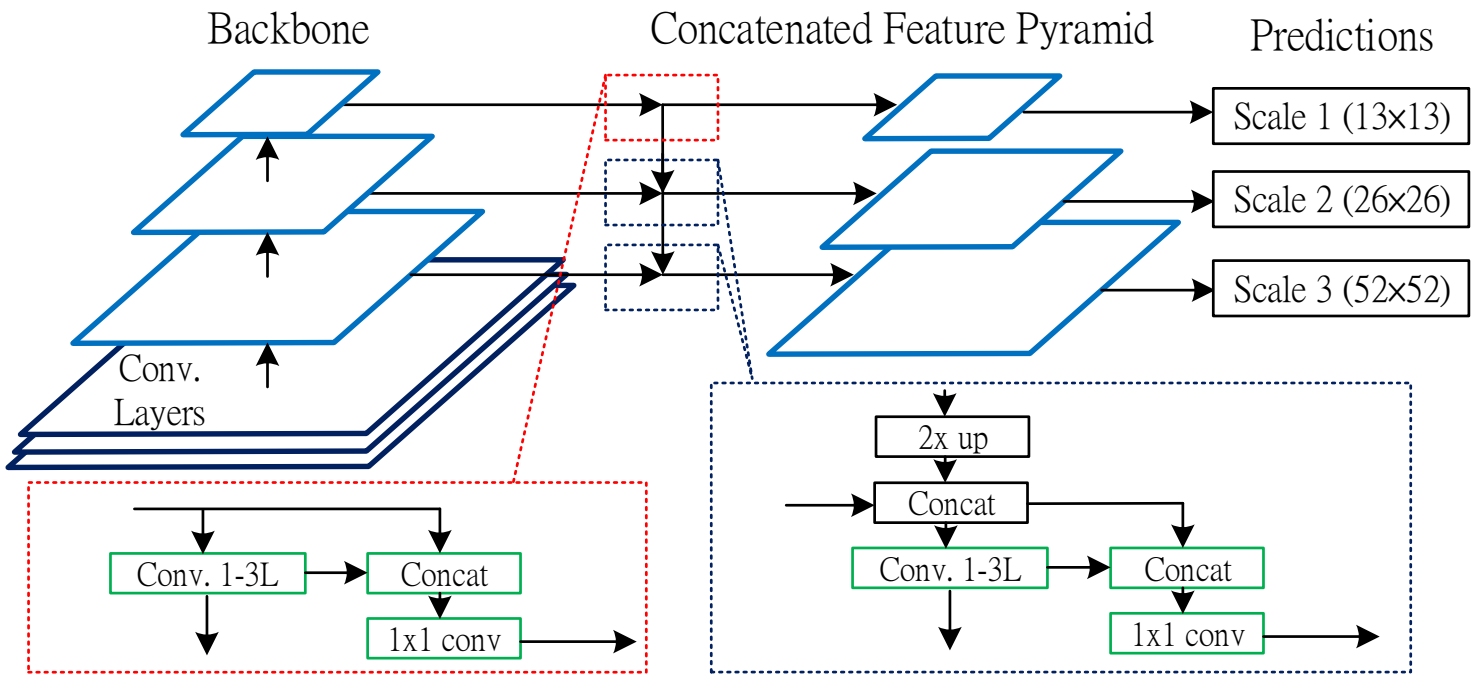

# Proposal Method (4/6)

## Proposed Concatenation Block (CB)

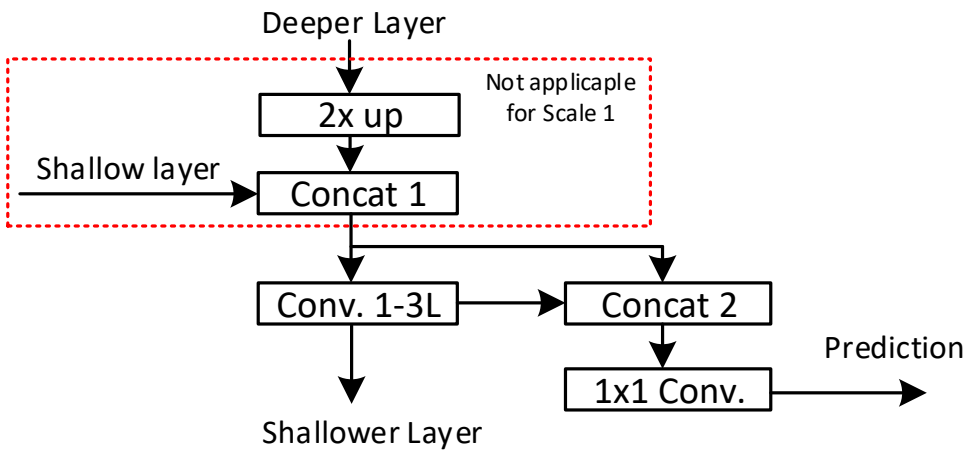

# Proposal Method (5/6)

- Backbone
  - Adopt darknet-19
  - Suitable to adopt deep backbone for better accuracy
  - Able to adopt a lighter backbone

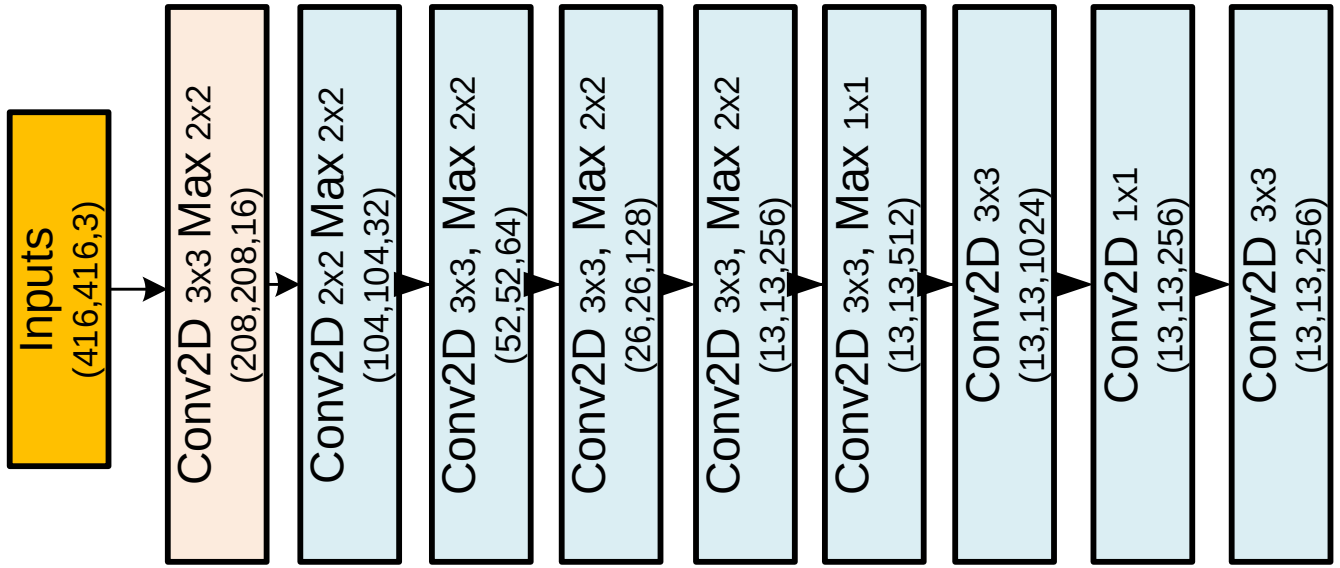

# Proposal Method (6/6)

Backbone of CFPN with CSP

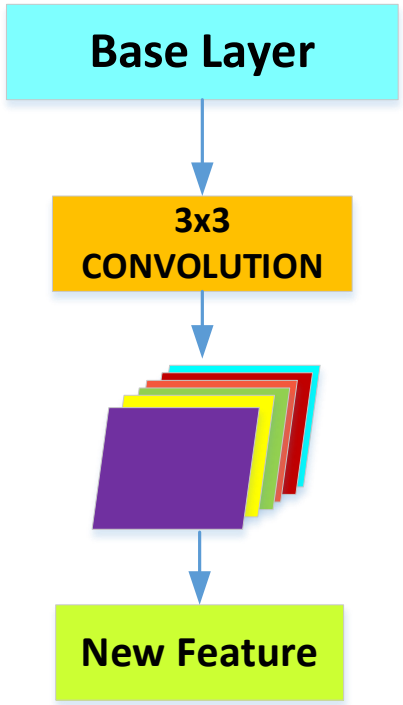


**CSP architecture**

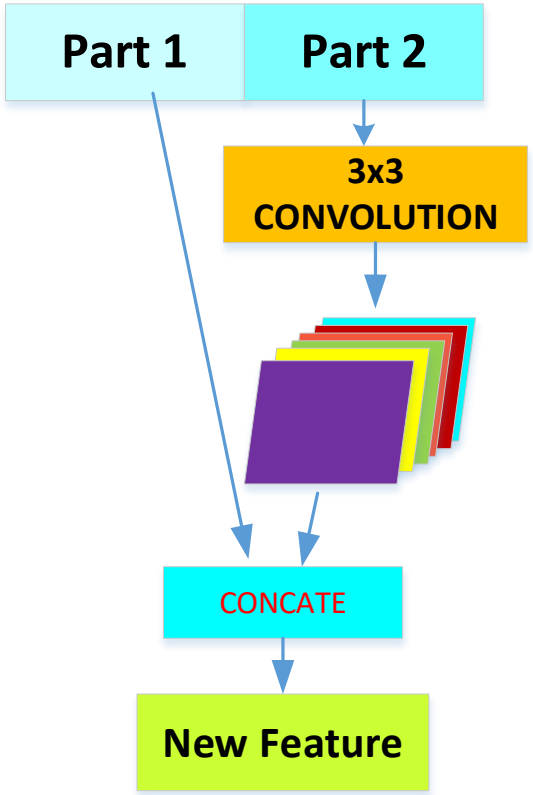

# Experimental Result

- Dataset
- HandFlow Results
- COCO Dataset

# Dataset

- HandFlow
- COCO

# HandFlow Result

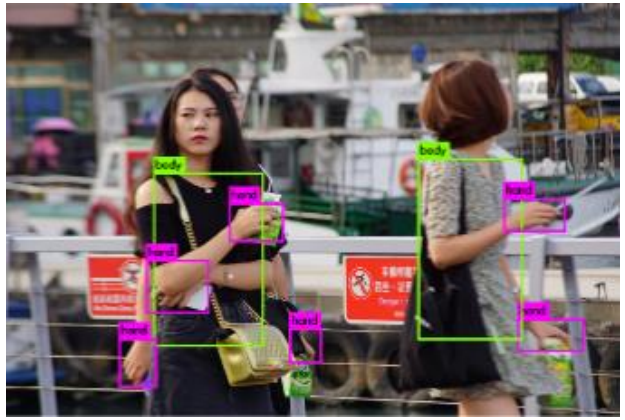



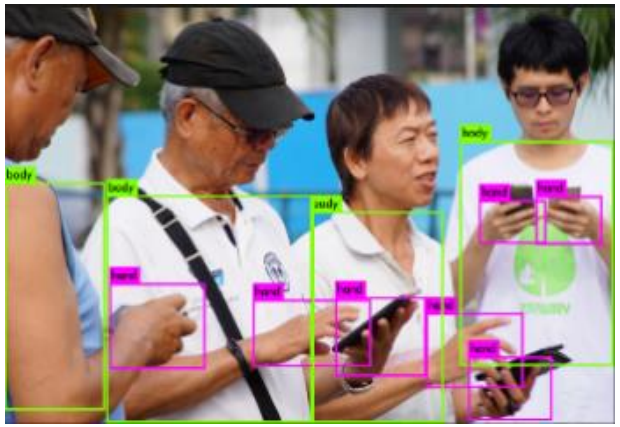

# Results of hand detection using our CFPN-net

# Performance Comparions on 416×416 Resolution Handflow Dataset on TX2 Embedded Device

| Model | Backbone | FP | CB | mAP:0.5 | FPS |
|---|---|---|---|---|---|
| | | | | | |
| YOLOv3 [38] | darknet53 | 3 | - | 84.0 | 5 |
| YOLOv2 [36] | darknet19 | - | - | 78.5 | 6 |
| YOLOv3-tiny [38] | tiny15 | 2 | - | 71.8 | 15 |
| YOLO v2 SpeedUP[36] | darknet19 | - | - | 68.0 | 13 |
| YOLT[49] | darknet19 | - | - | 85.6 | 5.5 |
| FPN-tiny | tiny15 | 3 | - | 90.3 | 18 |
| CFPN-1 | ~tiny15 | 2 | 1 | 91.3 | 33 |
| CFPN-3 | ~tiny15 | 3 | 3 | 95.6 | 33 |

# Performance Comparions on COCO Dataset

| Methods | Backbone | Train set | AP50 | APS |
|---|---|---|---|---|
| Faster R-CNN [31] | VGGNet-16 | trainval | 42.7 | - |
| R-FCN [30] | ResNet-101 | trainval | 51.9 | 10.8 |
| YOLOv2 [36] | DarkNet-19 | trainval35k | 44 | 5 |
| YOLOv3-608[38] | DarkNet-53 | trainval35k | 50.2 | 16.9 |
| SSD512 [32] | VGGNet-16 | trainval35k | 48.5 | 10.9 |
| RefineDet320 [47] | ResNet-101 | trainval35k | 51.4 | 10.5 |
| RefineDet512 [47] | VGGNet-16 | trainval35k | 54.5 | 16.3 |
| PFPNet-S512 [34] | VGGNet-16 | trainval35k | 54.8 | 16.3 |
| Proposed CFPN | **Darknet-53** | **trainval35k** | **54.8** | **18.4** |

# Discussion & Conclussion

- Outperforms the existing state-of-the-art models on HandFlow and COCO dataset
- The proposed CB reduces the computational cost but also improves the accuracy
- The model performance increases when the architecture integrates more CBs from the results of CFPN-1 and CFPN-3

Tha